Roll-A-Door®

Series 2 - Padbolt Locking

installation instructions **PART NO: 006577**

installation steps

1. Remove the guide blocks.
2. Drill 3 holes in each end of the bottom rail as per diagram.

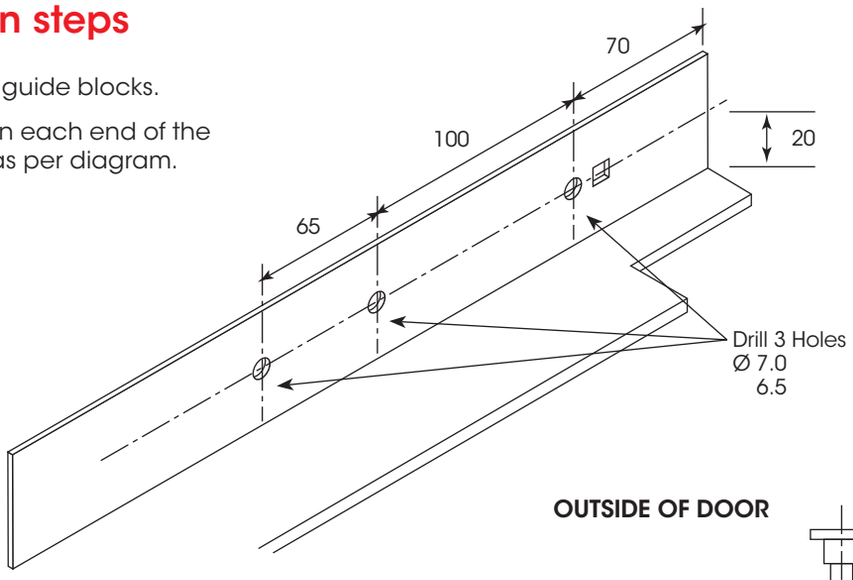

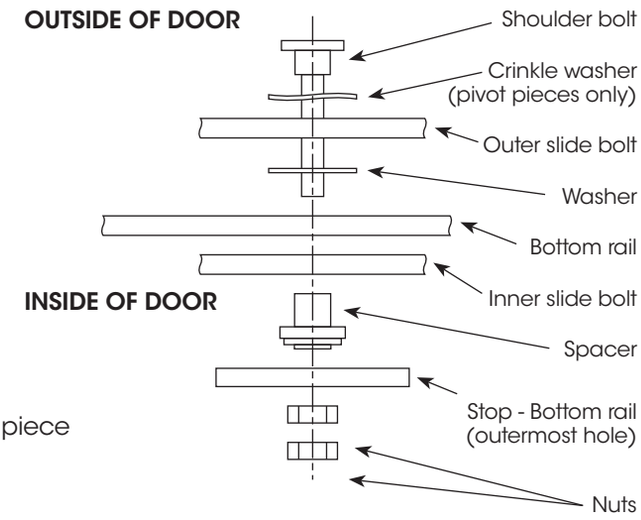

3. Assemble slide bolts as per diagrams.

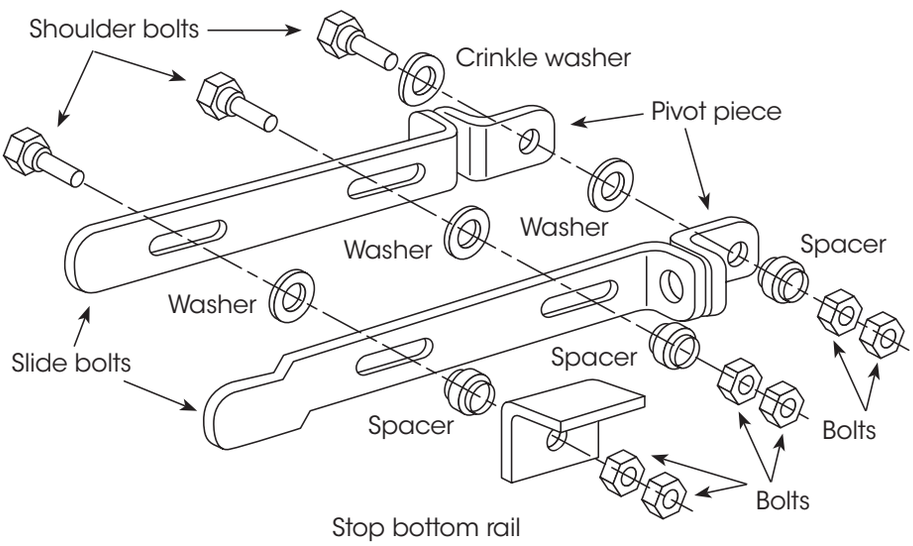

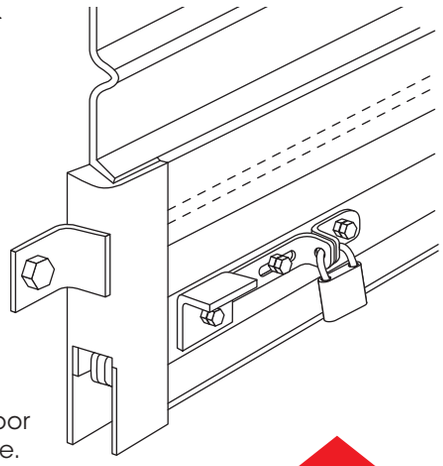

4. Notch guides to accept slide bolts.

NOTE: Guide blocks are not fitted in this application.

The Bottom Rail Stop must be secured to the slide bolt as shown before the door is operated. Failure to do so will result in unrolling of the door causing damage.

PART NO: 006577. REVISION 2 - OCTOBER 2016

These instructions are intended for professional garage door installers. All references are taken from inside looking out.